THE BALTIC JOURNAL
OF ROAD AND BRIDGE ENGINEERING

2008

3(3): 167–173

LIMIT STATE AND PROBABILISTIC FORMATS IN THE ANALYSIS OF BRACING PIERS OF ANNULAR CROSS-SECTIONS

Antanas Kudzys[1], Romualdas Kliukas[2]

[1] *Kaunas University of Technology, Institute of Architecture and Construction,*
Tunelio g. 60, 44405 Kaunas, Lithuania
E-mail: asi@asi.lt
[2] *Dept of Strength of Materials, Vilnius Gediminas Technical University,*
Saulėtekio al. 11, 10223 Vilnius, Lithuania
E-mail: pirmininkas@adm.vgtu.lt

Abstract. The expediency and efficiency of concrete bridge piers of annular cross-sections reinforced by steel bars uniformly distributed throughout their perimeter are considered. Modelling of permanent and live load effects and bearing capacity of bracing tubular piers is presented. The features of unsophisticated probability-based design formats are analysed. A simplified but fairly exact analysis of eccentrically loaded piers by limit state and probabilistic approaches is provided. The design practice of bracing tubular piers using limit state and probabilistic approaches is illustrated by a numerical example.

Keywords: bridge piers, tubular structures, road traffic loads, eccentric loading, limit state design, probability-based design.

1. Introduction

Any bridge system and its components must be economically reasonable, structuraly appropriate and aesthetically satisfactory. The concrete piers of annular cross-sections satisfy these requirements and provide the most appropriate moments of inertia of cross-sections in two main directions. Bracing piers of bridges are fixed at their base and top in order to provide the load from decks to foundations. Therefore, they can transmit to the foundations all effects caused by vertical and horizontal random forces and are assumed to contribute to the overall horizontal stability of a bridge.

The reliability verification and rationality assessment of structures may be made by using partial safety factors (in Europe) and load and resistance factors (in the USA and other countries) based on probability criteria or by applying probability-based approaches. The choice of the level of reliability of structural members and their systems should take into account the predicted consequences of failure in terms of risk in life and potential economic losses. However, the reliability level of columns designed by semi-probabilistic methods may be differ considerably (Diniz 2005). On the other hand, reliability verification formats based on probabilistic concepts help us evaluate objectively all uncertainties of design models and ascertain effective solutions of structures.

The results of this study involve the formulations of limit state and safety margin criteria, as well as the perfections of load effects, bearing capacity and survival probability formats for piers of annular cross-sections reinforced by steel bars uniformly distributed throughout their perimeters. They encourage designers and highway engineers to use the presented unsophisticated semi-probabilistic and probabilistic approaches in design practice of tubular piers of bridges.

2. Compressive forces and bending moments

The permanent gravity forces of piers $N_G = N_{G1} + N_{G2}$ are caused by self-weight of structures, G_1, and roadway surfacing weight, G_2. The value N_{G1} also depends on propped and unpropped members of continuous beams (Kudzys *et al.* 2007). The coefficients of variation of these loads are $\boldsymbol{\delta} G_1 = 0.10$ and $\boldsymbol{\delta} G_2 = 0.25$ (Czarnecki, Nowak 2008; Eamon, Nowak 2004). The surfacing weight, G_2, may be determined taking into account possible additional roadway topping.

For the general verifications of bridge piers, the transient live load models must cover most of the traffic effects. The representing variable live gravity and horizontal longitudinal forces N_Q and Q_l are caused by heavily-loaded trucks, cars and special vehicles. The horizontal force Q_l consists of braking, temperature and wind components spreading out over the entire pier cap.

ISSN 1822-427X print / ISSN 1822-4288 online DOI: 10.3846/1822-427X.2008.3.167-173

http://www.bjrbe.vgtu.lt

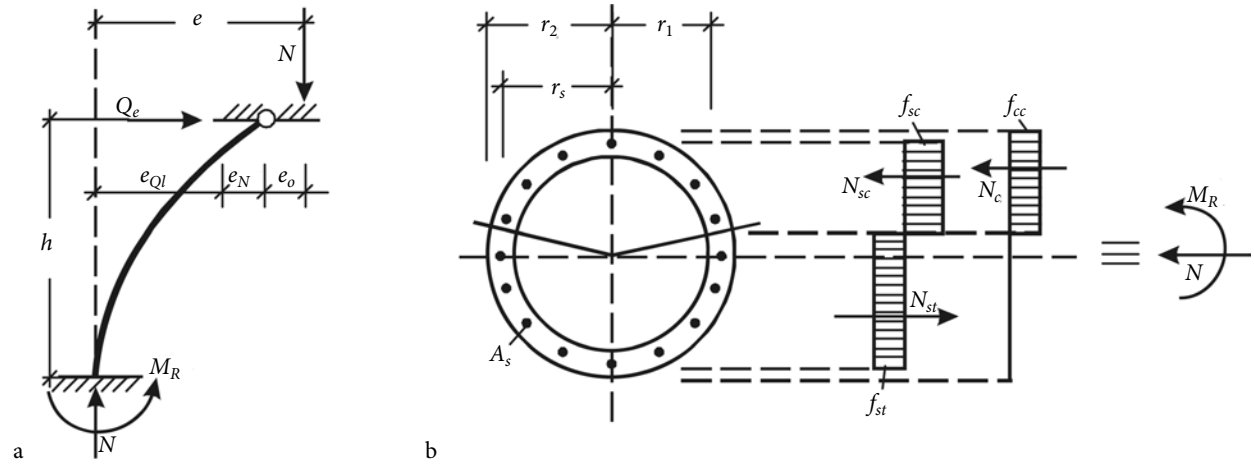

Fig. 1. Modelling eccentricities (a) and simplified stresses (b) in eccentrically loaded piers of annular cross-sections

For the 75-year of girder bridges service, the coefficient of variation of static live loads $\boldsymbol{\delta} Q_{st}$ can vary from 0.14 to 0.18 (Czarnecki, Nowak 2008; Eamon, Nowak 2004; Szerszen *et al.* 2005). For two heavily loaded trucks travelling side-by-side, the mean value of a dynamic load factor Q_{din}/Q_{st} may be taken as 0.10 with the coefficient of variation $\boldsymbol{\delta} Q_{din} = 0.80$ (Eamon, Nowak 2004). Thus, the coefficient of variation of bridge live loads may be expressed as:

$$\boldsymbol{\delta} Q = \left[\boldsymbol{\delta}^2 Q_{st} + \left(\frac{Q_{din}}{Q_{st}} \boldsymbol{\delta} Q_{din} \right)^2 + 2\boldsymbol{\delta} Q_{st} \times \frac{Q_{din}}{Q_{st}} \boldsymbol{\delta} Q_{din} \right]^{1/2}. \quad (1)$$

It is equal to 0.22–0.26 and may be taken as $\boldsymbol{\delta} Q = 0.25$.

Low bracing piers (h < 15 m) may be considered as eccentrically loaded columns. According to *EN 1992-2:2005 Eurocode 2: Design of Concrete Structures – Concrete Bridges – Design and Detailing Rules*, the first order eccentricity of force N of bracing piers (Fig. 1a) may be given by:

$$e_o = e_i + e_{sh} = \frac{0.005h}{\sqrt{h}} + \frac{r_2}{15} \geq 0.00167h + 0.02 \text{ (m)}, \quad (2)$$

where its components e_i and e_{sh} are associated with the inclination of a pier due to its geometric imperfection and by shift bearings, respectively.

According to *EN 1992-1:2004 Eurocode 2: Design of Concrete Structures – Part 1: General Rules and Rules for Buildings*, the nominal flextural stiffness of pier shafts with constant cross-sections may be represented as follows:

$$EI = K_c E_c I = \frac{0.3}{1 + 0.5\Phi \dfrac{M_{OG}}{M_{OE}}} \times E_c I, \quad (3)$$

where K_c – the factor for effects of cracking, creep and sustained loads, where Φ = 1.2–2.0 is the basic creep coefficient of concrete, whose value depends on its strength class, dimensions of cross-sections of piers and their environmental conditions; $M_{OG} = N_G e_o$ and $M_{OE} = Q_l h + N_E e_o$ – the 1st order bending moments caused by permanent and total load effects; E_c – the modulus of elasticity of a concrete; $I = \pi \dfrac{r_2^4 - r_1^4}{4}$ – the moment of inertia of a cross-section.

The 2nd order eccentricity of the applied compressive force $N_E = N_G + N_Q$ is defined as:

$$e = e_o + e_{Ql} + e_{NG} + e_{NQ} = e_o + \frac{Q_l h_3}{3EI} + \frac{N_E e_o h^2}{2EI}. \quad (4)$$

Its mean and variance are as follows:

$$e_m \approx e_o + \frac{Q_{lm} h^3}{3(EI)_m} + \frac{e_o h^2}{2(EI)_m} \left(N_{Gm} + N_{Qm} \right); \quad (5)$$

$$\begin{aligned} \boldsymbol{\sigma}^2 e = {} & \boldsymbol{\sigma}^2 e_{Ql} + \boldsymbol{\sigma}^2 e_{NG} + \boldsymbol{\sigma}^2 e_{NQ} + \\ & 2\left(\frac{\partial e}{\partial Q_l} \right)_m \left(\frac{\partial e}{\partial N_Q} \right)_m \boldsymbol{\sigma} e_{Q_l} \boldsymbol{\sigma} e_{N_Q} = \\ & \left[\frac{h^3}{3(EI)_m} \right]^2 \boldsymbol{\sigma}^2 Q_l + \\ & \left[\frac{e_o h^2}{2(EI)_m} \right]^2 \left(\boldsymbol{\sigma}^2 N_G + \boldsymbol{\sigma}^2 N_Q \right) + \\ & \left\{ \left[\frac{Q_l h^3}{3(EI)_m^2} \right]^2 + \left[\frac{e_o h^2}{2(EI)_m^2} \right]^2 \times \left(N_G^2 + N_Q^2 \right) \right\} \boldsymbol{\sigma}^2 (EI) + \\ & 2 \frac{h^3}{3(EI)_m} \times \frac{e_o h^2}{2(EI)_m} \boldsymbol{\sigma} Q_l \boldsymbol{\sigma} N_Q. \end{aligned} \quad (6)$$

From Eq (3), the mean and variance of a flexural stiffness of pier shafts may be expressed as:

$$(EI)_m \approx K_{cm}E_{cm}I_{cm} = \frac{0.3}{1+0.5\Phi\dfrac{M_{oGm}}{M_{oEm}}} \times E_{cm}I_{cm}, \quad (7)$$

$$\boldsymbol{\sigma}^2(EI) \approx (K_{cm}I_m)^2\boldsymbol{\sigma}^2E_c + (K_{cm}E_{cm})^2\boldsymbol{\sigma}^2I, \quad (8)$$

where the variances of the modulus of elasticity E_c and the moment of inertia I of considered pier shafts are calculated using the coefficients of variation $\boldsymbol{\delta}E_c = 0.15$ (JCSS 2000) and $\boldsymbol{\delta}I = \boldsymbol{\delta}A_c = \dfrac{1.2-r_c}{150(r_2-r_1)} \geq 0.02$, where $r_c = \dfrac{r_1+r_2}{2}$.

The total destroying moment of bracing piers is expressed as:

$$M_E = M_Q + M_G = Q_lh + N_Qe + N_Ge. \quad (9)$$

The means and variances of its components are:

$$M_{Qm} = Q_{lm}h + N_{Qm}e_m, \quad (10)$$

$$\boldsymbol{\sigma}^2M_Q = h^2\boldsymbol{\sigma}^2Q_l + e^2\boldsymbol{\sigma}^2N_Q + N_{Qm}^2\boldsymbol{\sigma}^2e + 2h_me_m\boldsymbol{\sigma}Q_l\boldsymbol{\sigma}N_Q, \quad (11)$$

$$M_{Gm} = N_{Gm}e_m, \quad (12)$$

$$\boldsymbol{\sigma}^2M_G = e^2\boldsymbol{\sigma}^2N_G + N_{Gm}^2\boldsymbol{\sigma}^2e. \quad (13)$$

When the design eccentricity $e_d = e_o + e_{Qld} + e_{Nd}$, the design value, M_{Ed}, of the total bending moment by (9) is equal to γ_FM_{Ek}, where $\gamma_F = 1.35$ (*ENV 1991-3:1995. Eurocode 1 – Part 3. Basis of Design and Actions on Structures. Traffic Loads on Bridges*) is the partial safety factor for actions and $M_{Ek} = Q_{lk}h + N_{Ek}e_d$ is its characteristic value.

3. Resisting moment

The modelling of stress-strain state and bearing capacity of eccentrically loaded concrete piers of annular cross-sections should take into consideration their mechanical features. According to Вадлуга (1979, 1984), the ultimate bending moment M_R (Fig. 1b) of columns reinforced by hot-rolled steel bars could be expressed as:

$$M_R = 1.2r_s(A_sf_{st} + N)\left\{1 - \frac{A_sf_{st} + N}{A_cf_{cc} + A_s(f_{st} + f_{sc})}\right\}. \quad (14)$$

The characteristic values of reinforcement strength in tension, f_{stk}, and compression, f_{sck}, should be not more as f_{yk} and 500 MPa, respectively. The coefficients of variation of reinforcement strengths f_{st} and f_{sc} in tension and compression zones of cross-sections may be expressed as $\boldsymbol{\delta}f_s = (\boldsymbol{\delta}^2f_{s1} + \boldsymbol{\delta}f_{s2})^{1/2} \approx 0.10$, where the components $\boldsymbol{\delta}f_{s1} \approx 0.06$ (JCSS 2000) and $\boldsymbol{\delta}f_{s2} \approx 0.08$ (Вадлуга 1979) define their statistical deviations and the errors of right-angled epures of stresses.

According to JCSS (2000), Holicky and Markova (2007), the mean strength of hot rolled bars in tension and compression $f_{stm} = f_{scm} = 560$ MPa. By Kudzys and Kliukas (2008), when high-strength coldworked steel is used, its conventional mean strength in tension and compression may be defined as $f_{stm} = 500$ MPa and $f_{scm} = 600$ MPa.

The compressive strength of concrete in tubular piers is presented as:

$$f_{cc} = \alpha_{cc}k_3f_{ck}, \quad (15)$$

where f_{ck} is its cylinder strength, MPa;

$$\alpha_{cc} = 1 - 0.2\frac{M_G}{M_E} \quad (16)$$

and

$$k_3 = 1 - 0.004f_{ck} \leq 0.85 \quad (17)$$

are the factors of the sustained load and stress block, respectively. According to Kudzys and Kliukas (2008), the coefficient of variation of concrete strength is $\boldsymbol{\delta}f_c = 0.089 + 3 \times (70 - f_{ck})^2 \times 10^{-5}$.

For design practice, Eq (14) may be rewritten in the form:

$$M_R = \frac{T_2T_3}{T_1}, \quad (18)$$

where

$$T_1 = A_cf_{cc} + A_s(f_{st} + f_{sc}), \quad (19)$$

$$T_2 = 1.2r_s(A_sf_{st} + N), \quad (20)$$

$$T_3 = A_cf_{cc} + A_sf_{sc} - N. \quad (21)$$

The statistics of resistance $R = M_R$ of pier shafts under bending with concentrical compressive force are given by:

$$R_m \approx \frac{T_{2m}T_{3m}}{T_{1m}}, \quad (22)$$

$$\boldsymbol{\sigma}^2R = \left[\frac{T_{2m}(T_{1m} - T_{3m})}{T_{1m}^2}\right]^2 \times \left(A_{cm}^2\boldsymbol{\sigma}^2f_{cc} + f_{ccm}^2\boldsymbol{\sigma}^2A_c + A_s^2\boldsymbol{\sigma}^2f_{sc}\right) + \left[\frac{A_sT_{3m}(1.2r_sT_{1m} - T_{2m})}{T_{1m}^2}\right]^2\boldsymbol{\sigma}^2f_{st} + \left[\frac{1.2r_sT_{3m} - T_{2m}}{T_{1m}}\right]^2\boldsymbol{\sigma}^2N, \quad (23)$$

where the variances of random variables are calculated by the expressions:

$$\boldsymbol{\sigma}^2f_{cc} = (\boldsymbol{\delta}f_c \times f_{ccm})^2,$$

$$\boldsymbol{\sigma}^2A_c = (\boldsymbol{\delta}A_c \times A_{cm})^2,$$

$$\boldsymbol{\sigma}^2f_{sc} = (\boldsymbol{\delta}f_s \times f_{scm})^2,$$

$$\boldsymbol{\sigma}^2 f_{st} = (\boldsymbol{\delta} f_s \times f_{stm})^2,$$

$$\boldsymbol{\sigma}^2 N = \boldsymbol{\sigma}^2 N_G + \boldsymbol{\sigma}^2 N_Q.$$

Usually, the reliability verification of bridge structures is based on the limit state concept used in conjunction with partial factor methods (*ENV 1991-3:1995 Eurocode 1 – Part 3. Basis of Design and Actions on Structures. Traffic Loads on Bridges; EN 1992-2:2005 Eurocode 2: Design of Concrete Structures – Concrete Bridges – Design and Detailing Rules*; *EN 1993-2:2006 Eurocode 3: Design of Steel Structures – Part 2: Steel Bridges*). The multiplication factor, K_F, should be applied to unfavourable actions using its value equal to 1.0 or 1.1, where consequences of failure are medium and high, respectively (*EN 1990:2002 Eurocode: Basis of Structural Design*). However, the indispensable reliability level may be not achieved for slightly and strongly reinforced columns (Holicky, Markova 2007). The appropriate level of structural quality and reliability of piers and other members of bridges may be obtained only using probabilistic design approaches.

4. Probability-based analysis

The safety margin of bridge piers may be defined as their time-dependent performance of the form:

$$Z(t) = g[\boldsymbol{\theta}, \mathbf{X}(t)] = \theta_R R - \theta_M M_G - \theta_M M_Q(t), \quad (24)$$

where the additional random variables θ_i, as professional factors, represent the uncertainties of design models in transformation of basic variables into resisting and destroying moments (JCSS 2000; Melchers 1999). Their means and standard deviations may be presented as $\theta_{Mm} \approx 1.0$, $\boldsymbol{\sigma}\theta_M \approx 0.10$ (JCSS 2000; Holicky, Markova 2007) and $\theta_{Rm} \approx 1.02$, $\boldsymbol{\sigma}\theta_R = 0.08$ (Вадлуга 1979). The values 1.02 and 0.06–0.08 also refer to the resistance of composite bridge girders (Eamon, Nowak 2004) and flexural reinforced concrete members (Nowak, Szerszen 2003).

The statistics of random bending moments may have the forms:

$$(\theta_M M_G)_m = \theta_{Mm} M_{Gm}, \quad (25)$$

$$\boldsymbol{\sigma}^2(\theta_M M_G) = \theta^2_{Mm}\boldsymbol{\sigma}^2 M_G + M^2_{Gm}\boldsymbol{\sigma}^2\theta_M, \quad (26)$$

$$(\theta_M M_Q)_m = \theta_{Mm} M_{Qm}, \quad (27)$$

$$\boldsymbol{\sigma}^2(\theta_M M_Q) = \theta^2_{Mm}\boldsymbol{\sigma}^2 M_Q + M^2_{Qm}\boldsymbol{\sigma}^2\theta_M, \quad (28)$$

where M_{Gm}, $\boldsymbol{\sigma}^2 M_G$, M_{Qm}, $\boldsymbol{\sigma}^2 M_Q$ are calculated from Eqs (10)–(13).

The statistics of the pier resistance are defined as follows:

$$(\theta_R R)_m = \theta_{Rm} R_m, \quad (29)$$

$$\boldsymbol{\sigma}^2(\theta_R R) = \theta^2{}_{Rm}\boldsymbol{\sigma}^2 R + R^2{}_m\boldsymbol{\sigma}^2\theta_R. \quad (30)$$

The probability distribution of permanent bending moment, M_G, and concrete pier resistance, R, is close to a normal distribution (Ellingwood 1981; JCSS 2000) (*ENV 1991-3:1995. Eurocode 1 – Part 3. Basis of Design and Actions on Structures. Traffic Loads on Bridges*; *EN 1990-1:2002. Eurocode 2: Design of Concrete Structures – Part 1: General Rules and Rules for Buildings; ISO 2394:1998. General Principles on Reliability for Structures*;). The probability distribution of bending moment $M_Q(t)$ caused by random live loads within 75-year reference time may be treated as lognormal one (Eamon, Nowak 2004) (*ISO 2394:1998. General Principles on Reliability for Structures*). An application of the lognormal distribution is convenient for loads due to the road traffic consisting of the sum of a number of identically distributed independent lorries, cars and special vehicles. A stationary lognormal process is used in the analysis of bridge extreme live load distribution (Bhattacharya 2008).

Therefore, for the sake of simplified but fairly exact probabilistic analysis of pier shafts, it is expedient to present Eq (24) in the form:

$$Z = R_c - M_c, \quad (31)$$

where

$$R_c = \theta_R R - \theta_M M_G, \quad (32)$$

$$M_c = \theta_M M_Q(t) \quad (33)$$

are the conventional resistance and bending moment of pier shafts, respectively. Their statistics are defined as:

$$R_{cm} = (\theta_R R)_m - (\theta_M M_G)_m, \quad (34)$$

$$\boldsymbol{\sigma}^2 R_c = \theta^2_{Rm}\boldsymbol{\sigma}^2 R + R^2_m\boldsymbol{\sigma}^2\theta_R + \theta^2_{Mm}\boldsymbol{\sigma}^2 M_G + M^2_{Gm}\boldsymbol{\sigma}^2\theta_M, \quad (35)$$

$$M_{cm} = (\theta_M M_Q)_m = Q_{lm} h + N_{Qm} e_m, \quad (36)$$

$$\boldsymbol{\sigma}^2 M_c = h^2\boldsymbol{\sigma}^2 Q_l + N^2_{Qm}\boldsymbol{\sigma}^2 e + e^2_m\boldsymbol{\sigma}^2 N_Q + 2he_m\boldsymbol{\sigma}N_Q\boldsymbol{\sigma}Q_l + M^2_{cm}\boldsymbol{\sigma}^2\theta_M. \quad (37)$$

The parameters R_c and M_c are statistically independent variables. Therefore, the survival probability of piers may be calculated by the formula

$$\mathbf{P}_S = \mathbf{P}\{R_c > M_c\} = \int_0^\infty f_R(x) F_M(x) dx, \quad (38)$$

where $f_R(x)$ is the density function of R_c by (32) and F_M – the cumulative distribution function of M_c by (33).

The survival probability of piers may be introduced by the reliability index

$$\beta = \Phi^{-1}(\mathbf{P}_S), \quad (39)$$

where $\Phi^{-1}(\mathbf{P}_S)$ – the inverse of the standard normal distribution. For columns designed by limit state methods, this index is between 3.3 and 5.0. It increases significantly if a reinforcement ratio increases and a concrete compressive strength decreases (Diniz 2005).

According to *EN 1990:2002 Eurocode: Basis of Structural Design*, the target reliability index, β_T, of structural

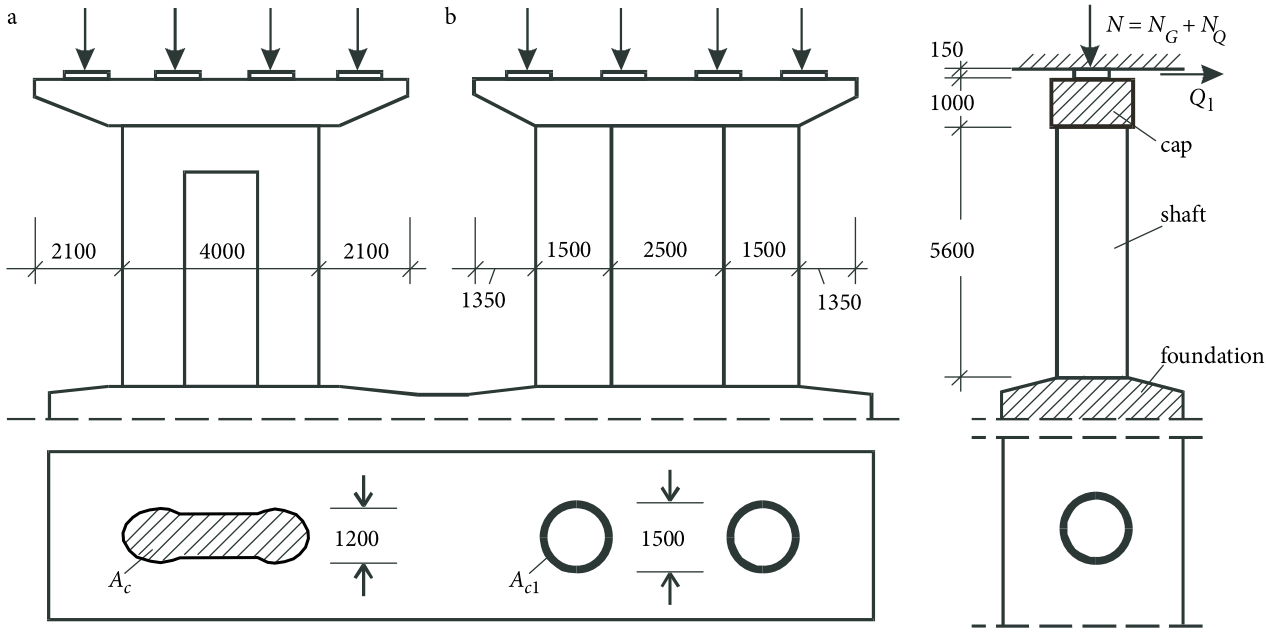

Fig. 2. Bridge piers with solid (a) and tubular (b) shafts

members may change from 3.3 to 4.3, depending on their failure consequence classes. For eccentrically loaded reinforced concrete columns and piers, the index β_T must be not less 3.5 and may be selected equal to 4.0 because their failure can be more brittle comparing to a failure of bending members (Szerszen *et al.* 2005; Szerszen, Nowak 2003).

5. Numerical illustration

5.1. The parameters of analysis

The bracing piers (Fig. 2) of annular cross-sections of the cross-street bridge in Kaunas are subjected to permanent and variable vertical forces $N_G = N_{G1} + N_{G2}$ and N_Q, as well as horizontal braking force Q_l. Their characteristic values are presented as:

$$N_{Gk} = 2.45 + 0.84 = 3.29 \text{ MN},$$

$$N_{Qk} = 2.60 \text{ MN},$$

$$N_{Ek} = 3.29 + 2.60 = 5.89 \text{ MN},$$

$$Q_{lk} = 0.617 \text{ MN}.$$

According to Eq (2), the eccentricity $e_o = 0.063$ m. The geometrical and mechanical parameters of piers are as follows:

$$h = 6.75 \text{ m},$$

$$r_2 = 0.75 \text{ m},$$

$$r_1 = 0.59 \text{ m},$$

$$r_s = 0.69 \text{ m},$$

$$A_s = 0.0225 \text{ m}^2 \ (28Ø32\ S500),$$

$$A_{cm} = 0.652 \text{ m}^2,$$

$$\rho_m = \frac{A_s}{A_{cm}} = 0.0346,$$

$$I = \pi \frac{r_2^4 - r_1^4}{4} = 0.1533 \text{ m}^4,$$

$$\boldsymbol{\delta} A_c = \boldsymbol{\delta} I = \frac{1.2 - r_c}{150(r_2 - r_1)} = 0.022,$$

$$\boldsymbol{\sigma}^2 A_c = 0.00021 \text{ m}^4,$$

$$\boldsymbol{\sigma}^2 I = 0.0000114 \text{ m}^8.$$

According to Eurocode recommendations, the partial safety factors are:

$$\gamma_c = 1.5,$$

$$\gamma_s = 1.15,$$

$$\gamma_F = \gamma_G = \gamma_Q = 1.35.$$

The parameters of the concrete C35/45 are given by:

$$f_{ck} = 35 \text{ MPa},$$

$$f_{cm} = 43 \text{ MPa},$$

$$\alpha_{ccm} = 0.981,$$

$$k_3 = 0.85,$$

$$f_{ccm} = \alpha_{ccm} k_3 f_{cm} = 35.56 \text{ MPa},$$

$$\boldsymbol{\delta} f_c = 0.125,$$

$$\boldsymbol{\sigma}^2 f_{cc} = (0.125 \times 35.56)^2 = 20.09 \text{ MPa}^2,$$

$$\alpha_{ccd} = 1.0,$$

$$E_{cm} = 35 \text{ GPa},$$

$$\boldsymbol{\sigma}^2 E_c = (0.15 \times 35)^2 = 27.56 \text{ GPa}^2,$$

$$E_{cd} = 35/1.2 = 29.17 \text{ GPa}.$$

Thus, $f_{ccd} = \dfrac{k_3 f_{ck}}{\gamma_c} = 19.833$ MPa, $\Phi = 1.9$.

The parameters of reinforcing bars of the class S500 B are defined as:

$$f_{yk} = 500 \text{ MPa},$$

$$f_{std} = f_{scd} = \frac{500}{1.15} = 435 \text{ MPa},$$

$$f_{stm} = f_{scm} = 560 \text{ MPa}$$

(JCSS 2000; Holicky, Markova 2007),

$$\boldsymbol{\delta} f_s = 0.10,$$

$$\boldsymbol{\sigma}^2 f_{st} = \boldsymbol{\sigma}^2 f_{sc} = (0.10 \times 560)^2 = 3136 \text{ (MPa)}^2,$$

$$E_s = 200 \text{ GPa}.$$

The statistics $\theta_{Mm} = 1.0$, $\boldsymbol{\sigma}\theta_M = 0.1$, $\theta_{Rm} = 1.02$, $\boldsymbol{\sigma}\theta_R = 0.08$.

5.2. Limit state analysis

The design value of flexural stiffness by (3) for pier shafts is defined as:

$$(EI)_d = \frac{0.3}{1 + 0.5 \times 1.9 \times \dfrac{0.278}{6.12}} \times 29170 \times 0.1533 = 1286 \text{ MNm}^2.$$

Thus, according to Eq (4), the design eccentricity

$$e_d = e_o + e_{Qld} + e_{Nd} = 0.063 + 0.0664 + 0.0089 = 0.1383 \text{ m}.$$

The design values of the destroying forces and bending moments of considered piers are:

$$Q_{ld} = \gamma_F Q_{lk} = 0.833 \text{ MN},$$

$$N_{Ed} = \gamma_F (N_{Gk} + N_{Qk}) = 7.952 \text{ MN},$$

$$M_{Ed} = Q_{ld} h + N_{Ed} e_d = 0.833 \times 6.75 + 7.952 \times 0.1383 = 6.73 \text{ MNm}.$$

According to Eq (18), the design value of the resisting moment is expressed as:

$$M_{Rd} = \frac{T_{2d} T_{3d}}{T_{1d}} = \frac{14.70 \times 14.76}{32.50} = 6.67 \text{ MNm} \approx M_{Ed} (= 6.73 \text{ MNm}).$$

Thus, the piers are suitable for the considered bridge.

5.3. Probability-based analysis

The mean values and variances of forces are as follows:

$$N_{Gm} = N_{Gk} = 3.29 \text{ MN};$$

$$\boldsymbol{\sigma}^2 N_G = (0.1 \times 3.29)^2 = 0.1084 \text{ (MN)}^2;$$

$$N_{Qm} = \frac{N_{Qk}}{1 + \beta_{0.95} \boldsymbol{\delta} Q} = 1.789 \text{ MN},$$

$$\boldsymbol{\sigma}^2 N_Q = (0.25 \times 1.789)^2 = 0.2 \text{ (MN)}^2;$$

$$N_{Em} = 3.29 + 1.789 = 5.079 \text{ MN},$$

$$\boldsymbol{\sigma}^2 N_E = 0.1084 + 0.2 = 0.3084 \text{ (MN)}^2;$$

$$Q_{lm} = \frac{Q_{lk}}{1 + \beta_{0.95} \boldsymbol{\delta} Q_l} = 0.424 \text{ MN},$$

$$\boldsymbol{\sigma}^2 Q_l = (0.25 \times 0.424)^2 = 0.01124 \text{ (MN)}^2.$$

The factor $K_{cm} = \dfrac{0.3}{1 + 0.5 \times 1.9 \times \dfrac{0.208}{3.182}} = 0.2826$. Therefore, the statistics of flexural stiffness of piers by (7) and (8) are:

$$(EI)_m = K_{cm} E_{cm} I_m = 0.2825 \times 35\,000 \times 0.1533 = 1516 \text{ MNm}^2$$

and

$$\boldsymbol{\sigma}^2 (EI) = (K_{cm} I_m)^2 \boldsymbol{\sigma}^2 E_c + (K_{cm} E_{cm})^2 \boldsymbol{\sigma}^2 I = 52\,800 \text{ (MNm}^2)^2.$$

From Eqs (5) and (6), the statistics of the second order eccentricity are:

$$e_m = 0.063 + 0.02867 + 0.00313 + 0.0017 = 0.0965 \text{ m},$$

$$\boldsymbol{\sigma}^2 e = (0.703 + 0.003 + 0.0025 + 0.061) \times 10^{-4} = 0.000077 \text{ m}^2.$$

According to Eqs (25)–(28) and Eqs (36), (37), the statistics of bending moments are as follows:

$$(\theta_M M_G) = M_{Gm} = N_{Gm} e_m = 3.29 \times 0.0965 = 0.318 \text{ MNm},$$

$$\boldsymbol{\sigma}^2 (\theta_M M_G) = 3.29^2 \times 0.000077 + 0.0965^2 \times 0.1084 + 0.318^2 \times 0.01 = 0.00285 \text{ (MNm)}^2,$$

$$M_{cm} = (\theta_M M_Q)_m = 0.424 \times 6.75 + 1.789 \times 0.0965 = 3.034 \text{ MNm},$$

$$\boldsymbol{\sigma}^2 M_c = \boldsymbol{\sigma}^2 (\theta_M M_Q) = 6.75^2 \times 0.01124 + 1.789^2 \times 0.000077 + 0.0965^2 \times 0.2 + 2 \times 6.75 \times 0.0965 \times 0.447 \times 0.106 + 3.034^2 \times 0.01 = 0.668 \text{ (MNm)}^2.$$

According to Eqs (22), (29) and (30), the statistics of shaft resistance under bending with a concentrical force are:

$$R_m = M_{Rm} = \frac{T_{2m}T_{3m}}{T_{1m}} = \frac{14.64 \times 30.86}{48.55} = 9.306 \text{ MNm},$$

$$(\theta_R R)_m = 1.02 \times 9.306 = 9.492 \text{ MNm},$$

$$\boldsymbol{\sigma}^2 R = 0.1253 + 0.1777 + 0.01408 = 0.3438 \text{ (MNm)}^2,$$

$$\boldsymbol{\sigma}^2(\theta_R R) = 1.02^2 \times 0.3438 + 9.306^2 \times 0.0064 = 0.9119 \text{ (MN)}^2.$$

From Eqs (34) and (35), the statistics of conventional resistance are:

$$R_{cm} = 1.02 \times 9.306 - 0.318 = 9.174 \text{ MNm},$$

$$\boldsymbol{\sigma}^2 R_c = 0.9119 + 0.0029 = 0.9148 \text{ (MNm)}^2.$$

According to Eqs (38) and (39), the survival probability and reliability index of pier shafts are as follows: $\mathbf{P}_s = 0.999958$ and $\beta = 3.93 \approx \beta_T = 4.0$. Thus, their structural safety is sufficient and the constructive solution is effective.

The dimensions and the reinforcement of considered bracing pier satisfy reliability requirements of the current limit state and suggested probability-based design methods. The cross-sectional areas of concrete and reinforcing bars of solid and tubular pier shafts (Fig. 2) respectively are of the size: $A_c = 4.73$ m^2, $A_s = 0.0364$ m^2 and $2A_{c1} = 1.304$ m^2 << 4.73 m^2, $2A_{s1} = 0.045$ m^2 > 0.0364 m^2. However, the solid concrete pier is in need of a great amount of the transient reinforcement. There seems to be a clear rational use of concrete pier shafts of annular cross-sections.

6. Conclusions

The concrete bracing piers of annular cross-sections reinforced by steel bars uniformly distributed throughout their perimeter may be treated as economically reasonable and constructively appropriate structures for bridges. The analysis of bearing capacity and reliability of fairly complicated eccentrically loaded shafts of piers may be successfully based on the semi-probabilistic and full probabilistic concepts and approaches, presented in this paper. In both cases, the destroying and resisting bending moments of bracing piers may be calculated in a simple engineering manner by Eqs (9) and (14). The statistics of a shaft resistance may be expressed by Eqs (22) and (23).

For road bridges, the live load, Q, can be described by a lognormal distribution with a coefficient of variation $\boldsymbol{\delta}Q = 0.25$. The quantitative reliability index β by Eq (39) is indispensable in the objective assessment of a structural safety level of bridge piers and for an acceptability of their constructive solutions. The target reliability index β_T for pier shafts may be selected equal to 4.0. The presented design methods and their numerical illustration show that the prediction of a survival probability of piers, including their reliability index, may be based on unsophisticated probabilistic approaches. It may stimulate engineers, having a min of appropriate skills, to use full probabilistic approaches in design practice more courageously and effectively.

References

Bhattacharya, B. 2008. The extremal index and the maximum of a dependent stationary pulse load process observed above a high threshold, *Structural Safety* 30: 34–48.

Czarnecki, A. A.; Nowak, A. S. 2008. Time variant reliability profiles for girder bridges, *Structural Safety* 30: 49–64.

Diniz, S. M. C. 2005. Effect of concrete age specification on the reliability of HSC columns [CD-ROM], in *Proc of the 9th International Conference on Structural Safety and Reliability* of Engineering Systems and Structures (*ICOSSAR 2005).* Ed. by Augusti, G.; Schuëller, M.; Ciampoli, M. June 19–23, 2005, Rome, Italy. Rotterdam: Millpress, 565–572. ISBN 9059660404.

Eamon, Ch. D.; Nowak, A. S. 2004. Effect of secondary element on bridge structural system reliability considering moment capacity, *Structural Safety* 26: 29–47.

Ellingwood, B. R. 1981. Wind and snow load statistics for probability design, *Journal of the Structural Division*, *ASCE* 107(7): 1345–1349.

Holicky, M.; Markova, J. 2007. Reliability differentiation and production quality in codes, in *Risk, Reliability and Social Safety-Aven & Vinnem (eds)*, London, 1763–1768.

Joint Committee on Structural Safety (JCSS) [on-line]. 2000. Probabilistic model code: Part 1 – Basis of design, JCCC-OSTL/DIA/VROU-10-11-2000 12th draft [cited 04-Sept-2006]. Available from Internet:<http://www.jcss.ethz.ch/publications/PMC/DesBasis2a.pdf>.

Kudzys, A; Kliukas, R.; Kudzys, A. 2007. On desing features of propped and unpropped hyperstatic structures, *Journal of Civil Engineering and Management* 13(2): 123–129.

Kudzys, A.; Kliukas, R. 2008. The resistances of compressed spun concrete members reinforced by high-strength steel bars, *Materials and Structures* 41: 419–430.

Melchers, R. E. 1999. *Structural reliability analysis and prediction*. 2nd edition. Chichester: John Wiley & Sons, 437 p. ISSN 9780471987710

Nowak, A. S.; Szerszen, M. M. 2003. Calibration of design code for buildings (ACI 318): Part 1 – Statistical models for resistance, *ACI Structural Journal* 100(3): 377–382.

Szerszen, M. M.; Nowak, A. S. 2003. Calibration of design code for buildings (ACI 318). Part 2 – Reliability analysis and resistance factors, *ACI Structural Journal* 100(3): 383–391.

Szerszen, M. M.; Szwed, A.; Nowak, A. S. 2005. Reliability analysis for eccentrically loaded columns, *ACI Structural Journal* 102(5): 676–688.

Вадлуга, Р. 1979. О практическом расчете по прочности бетонов и железобетонных элементов кольцевого сечения [Vadluga, R. Practical method of strength analysis of concrete and reinforced concrete members of annular cross-section], *Железобетонные конструкции* [Concrete Structures] 9: 49–58.

Вадлуга, Р. 1985. Оценка прочности железобетонных элементов кольцевого сечения [Vadluga, R. The evaluation of strength of reinforced concrete members of ring cross-section], *Железобетонные конструкции* [Concrete Structures] 14: 97–102.

Received 5 March 2008, accepted 22 Aug 2008